Dart Aerospace Ltd.

Date: Wednesday, 6/28/2006 10:14:38 AM
User: Kim Johnston

Process Sheet

Customer	: CU-DAR001 Dart Helicopters Services	**Drawing Name**	: WEARPLATE
Job Number	: 27716		
Estimate Number	: 12467		
P.O. Number	: N/A	**Part Number**	: D3512 1 941 06.06.28
This Issue	: 6/28/2006 **S.O. No.** : N/A	**Drawing Number**	: D3512 PREL
Prsht Rev.	: NC	**Project Number**	: N/A
First Issue	: N/A **Type** : SMALL /MED FAB	**Drawing Revision**	: PREL
Previous Run	: N/A	**Material**	: N/A
Written By	: SEE COMMENTS BELOW	**Due Date**	: 7/5/2006 **Qty:** 4 **Um:** Each
Checked & Approved By	: 06 06 · 28		
Comment	: Est Rev.A New Issue 06-06-20 JLM		

Additional Product

Job Number:

Seq. #:	Machine Or Operation:	Description :
1.0	M1010S~~20GA~~ 16 GA	1010/1025/A21/6aA SHEET

Comment: Qty.: 0.2741 sf(s)/Unit Total : 1.0962 sf(s)
1010/1025/A~~21/6aA SHEET~~
(M1010S~~20~~16GA)
Batch: ~~M1004403~~ M# 9131

06-06-29

2.0	WATER JET	FLOW WATER JET

Comment: FLOW WATER JET
1-Cut as per Dwg D3512
Dwg Rev: Prel
Prog Rev: Prel

2-Deburr if necessary SAD 06:06:29 4

3.0	BRAKE NC	NC BRAKE

Comment: NC BRAKE
Deburr if necessary
Form as per dwg D3512 using DT8179 S. SAD 06/07/04 4

4.0	QC5	INSPECT WORK TO CURRENT STEP

Comment: INSPECT WORK TO CURRENT STEP 06.07.04 4

5.0	LARGE FAB 1	LARGE FABRICATION RESOURCE 1

Comment: LARGE FABRICATION RESOURCE 1
Weld hard surface using DT8210 as per Dwg D3512 & QSI 004
Qty Description Batch M100780 H.M 06-07-05 4

2.1 QC2 SAD 06:06:29
2.2 QC8 06.07.03

Dart Aerospace Ltd

W/O:		WORK ORDER CHANGES					
DATE	STEP	PROCEDURE CHANGE	By	Date	Qty	Approval Mfg / Design Mgr	Approval QC Inspector
06.07.19	1.0	3 parts Scrap, Due Material Damage 6 parts Scrap: wrong Material, (Est. was wrong) update estimate.		–	–	06.07.19	06-07-19

NCR:		WORK ORDER NON-CONFORMANCE (NCR)						
DATE	STEP	Description of NC Section A	Corrective Action Section B			Verification Section C	Approval Design Mgr	Approval QC Inspector
			Initial Design Mgr	Action Description Design Mgr	Sign & Date			
06.07.19	1.0	3 parts scrap, due to material damage & 6 parts scrap due to wrong material. R.C. Estimate was wrong wrong material.		redo estimate for the proper mat'l. Scrap: destroy wear plates.		06.07.24		06-07-19

Part No: _____ PAR #: _____ Fault Category: _____ NCR: Yes No DQA: _____ Date: 06/07/24

NOTE: Date & initial all entries QA: N/C Closed: _____ Date: _____

H:\forms\Quality Assurance\approved forms\NCRWO revC

Date: Wednesday, 6/28/2006 10:14:38 AM
User: Kim Johnston

Process Sheet

Customer: CU-DAR001 Dart Helicopters Services **Drawing Name:** WEARPLATE

Job Number: 27716 **Part Number:** D3512

Job Number:

Seq. #:	Machine Or Operation:		Description :
	A/R 7560 Hardcoat Rod M100780		H.M 06-07-05 (4)
6.0	QC5/9	WELD INSPECTION	
	Comment: WELD INSPECTION		06/07/05 (4)
7.0	POWDER COATING	POWDER COATING	
	Comment: POWDER COATING Powder Coat Grey Sandtex (Ref: 4.3.5.6) as per QSI 005 4.3		a m 06-07-18 (4)
8.0	QC3	INSPECT POWDER COAT/CHEMICAL CONVERSION	
	Comment: INSPECT POWDER COAT		06 07 18 (4)
9.0	PACKAGING 1	PACKAGING RESOURCE #1	
	Comment: PACKAGING RESOURCE #1 Identify and Stock Location: 87363		AP 06/07/19 (4)
10.0	DC	DOCUMENT CONTROL	
	Comment: DOCUMENT CONTROL Inspection Level 21		06/07/24 (4)

Job Completion

U 06.07.19

Return to AP
after completion
AP 06.07.19

Form: rprocess

Dart Aerospace Ltd

W/O:		WORK ORDER CHANGES					
DATE	STEP	PROCEDURE CHANGE	By	Date	Qty	Approval Mfg / Design Mgr	Approval QC Inspector

NCR:		WORK ORDER NON-CONFORMANCE (NCR)						
DATE	STEP	Description of NC Section A	Corrective Action Section B			Verification Section C	Approval Design Mgr	Approval QC Inspector
			Initial Design Mgr	Action Description Design Mgr	Sign & Date			

Part No: _____ **PAR #:** _____ **Fault Category:** _____ **NCR:** Yes No **DQA:** _____ **Date:** _____

NOTE: Date & initial all entries **QA: N/C Closed:** _____ **Date:** _____

H:\forms\Quality Assurance\approved forms\NCRWO revC

PRELIMINARY ISSUE

DESIGN	DRAWN BY	DART AEROSPACE USA, INC. PORT HADLOCK, WA	
PH	PH		
CHECKED	APPROVED	DRAWING NO. D3512	REV. A SHEET 1 OF 1
DATE 06.04.21		TITLE WEARPLATE	SCALE 1:8
A	06.04.21	NEW ISSUE	

D3512-1F FLAT PATTERN

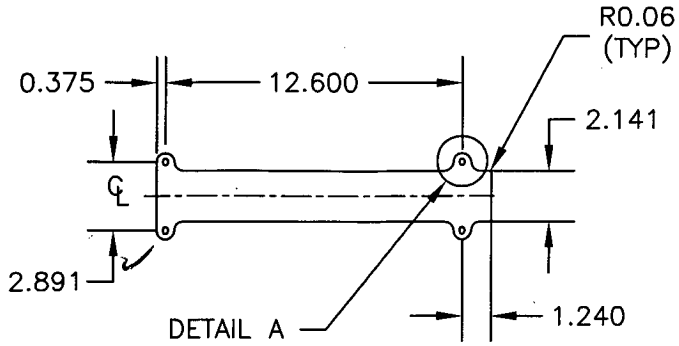

D3512-1 BENDING DETAIL

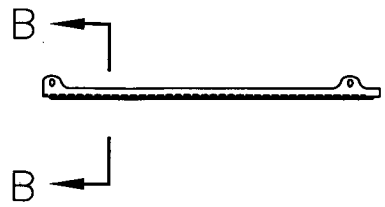

SECTION B-B
SCALE 2:5

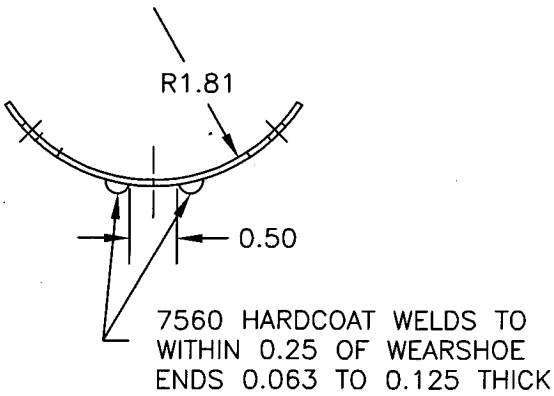

DETAIL A
SCALE 2:5

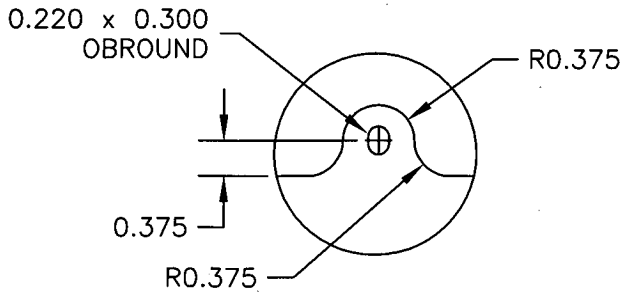

D3512-1 WEARPLATE

1) MATERIAL: AISI 1010-1025 OR ASTM A36/A366/A1008 OR CSA G40-21, 38W/44W/50W/60W/70W SERIES STEEL 16 GAUGE (0.063 THICK) (REF. DART MATERIAL SPEC M1010-S16GA)
2) FINISH: POWDER COAT GREY SANDTEX (REF.4.3.5.6) PER DART QSI 005
3) TOLERANCES ARE PER DART QSI 018 UNLESS OTHERWISE NOTED
4) ALL DIMENSIONS IN INCHES
5) WELD PER DART QSI 004
6) PART IS SYMMETRICAL ABOUT CENTERLINE
7) BREAK ALL SHARP EDGES 0.005 TO 0.015

SHOP COPY
RETURN TO
ENGINEERING
UNCONTROLLED COPY
SUBJECT TO AMENDMENT
WITHOUT NOTICE
WORK ORDER
NO. 27716

Copyright © 2006 by DART AEROSPACE USA, INC.

THIS DOCUMENT IS PRIVATE AND CONFIDENTIAL AND IS SUPPLIED ON THE EXPRESS CONDITION THAT IT IS NOT TO BE USED FOR ANY PURPOSE OR COPIED OR COMMUNICATED TO ANY OTHER PERSON WITHOUT WRITTEN PERMISSION FROM DART AEROSPACE USA, INC.

DART AEROSPACE LTD	Work Order: 27716
Description:	Part Number: D3512-1
Inspection Dwg: , Rev:	Page 1 of 1

FIRST ARTICLE INSPECTION CHECKLIST

[X] First Article [X] Prototype

Drawing Dimension	Tolerance	Actual Dimension	Accept	Reject	Method of Inspection	Comments
2.891	+/- 0.010	2.890	✓		Vern	
1.240	+/- 0.010	1.235	✓		vertical gauge	
2.141	+/- 0.010	2.141	✓		Vern	
12.600	+/- 0.010	12.606	✓		measuring tape	
0.375	+/- 0.010	0.369	✓		Vern	
0.220	+/- 0.010	0.230	✓		Vern	
0.300	+/- 0.010	0.309	✓		Vern	
0.375	+/- 0.010	0.369	✓		Vern	
R0.375	+/- 0.010	0.375	✓		~~dark~~ R-G	
0.063	+/- 0.010	0.055	✓		Vern	

Measured by:	SAD
Date:	06:06:29

Audited by:	[signature]
Date:	06.07.03

Prototype Approval:	RA
Date:	06.07.03

Rev	Date	Change	Revised by	Approved
A		New Issue	KJ/JLM	

M 9131

C 78241

宝山钢铁股份有限公司
BAOSHAN IRON & STEEL CORPORATION LTD.

产品质量证明书
INSPECTION CERTIFICATE

上海市宝山区同济路 1800 号 邮编 201
1800 TONG JI ROAD, BAOSHAN DISTRICT
201900 SHANGHAI, P. R. CHINA
TEL(021)56648000 – 226
FAX(021)56601754

买单位 BUYER	宝钢集团国际经济贸易总公司	产品名称 PRODUCT	COLD ROLLED STEEL SHEET IN COIL
卖单位 PURCHASER	宝钢集团国际经济贸易总公司	代号 CUSTOMER'S NO.	004155
		证书号 CERTIFICATE NO.	1006191.00351
唯 ICATION	ASTM A366 CQ PT.A-PM.A per Dwg 01.03.27	客户订单编号 CUSTOMER ORDER NO.	
		签发日期 DATE OF ISSUE	2000/03/25
		交货日期 DATE OF DELIVERY	2000/06/11
		许可证号 LICENSE NO.	
		合同号 CONTRACT NO.	LA3003800

	捆包号 PACK NO	件数 QTY	炉号 HEAT NO.	规格及重量 MATERIAL DESCRIPTION 厚度 THICK	宽度 WIDTH	长度 LENGTH	张数 SHEETS	重量 MASS (kg)	C	Si	Mn	P	S								底屈 Y.S.	抗拉 T.S.	伸长 EL			弯曲 BEND TEST	#01 硬度 HARDNESS	#08 杯突	冲击值
				mm					x10⁻²	x10	x10⁻²	x10⁻²	x10⁻²	x10	x10	x10	x10	x10	x10	x80	MPa		%	值	值			mm	MPa
3	02	1	123359					12940	4		24	19	11								255	350	41				53		
3	03	1	123359					13950	4		24	19	11								255	350	41				53		
4	02	1	123360					13600	5		23	13	9								310	350	40				53		
4	03	1	123360					12510	5		23	13	9								310	350	40				53		
5	02	1	123356					12960	4		23	14	11								250	345	39				50		
1	03	1	123756					12870	3		23	22	13								245	350	42				51		
2	02	1	123828					13820	4		23	23	14								275	345	41				54		
2	03	1	123828					13910	4		23	23	14								275	345	41				54		
9	02	1	123827					13140	5		24	15	16								255	355	42				53		
1	03	1	123827					13260	5		24	15	16								293	355	39				55		
Total		转下页					转下页		SIZE: 0.0560" MIN X48.375" X																				

注 MARKS

释 NOTES

Y.S = YIELD STRENGTH T.S. = TENSILE STRENGTH EL= ELONGATION G.L.= GAUGE LENGTH L1= 5.65SQRT(A0) L2= 50MM L3= 80MM
#01:HRB #02:HRF #03:HR30T #04:HV #05:HR15T #06:ERICHSEN

本产品已按上述要求进行制造和检验，其结果符合要求，特此证明。
WE HEREBY CERTIFY THAT MATERIAL DESCRIBED HEREIN HAS MANUFACTURED AND TESTED WITH SATISFACTORY RESULTS IN ACCORDANCE WITH THE REQUIREMENTS OF THE ABOVE MATERIAL SPECIFICATION.

收货者 FOR TO

Zhou Shichun
技术部部长
DIRECTOR OF TECHNICAL DE

DWG — ~~ASTM~~ AISI 1018 – 1020
RECEIVED 依附 #266 — ACCEPTABLE